ACHILLES LOGO
ACHILLES "A' LOGO – **C493**
ACHILLES WAVE LOGO – **C492**

SEAT PARTS
WOOD SEAT – **WST310LG**
SEAT CHANNEL PATCH – **DC412PG**
SEAT PLASTIC CHANNELS – **EA003**

TOWING D-RINGS
35MM – **C414GY**

FABRIC HANDLES – **C431PG**

TEAR DROP RUBSTRAKE
GRAY / WHITE – **VDF090WH**

AIR VALVE PARTS
COMPLETE – **C342GY**
VALVE CAP – **C349GY**
CAP DIAPHRAM – **C348**
VALVE BASE – **C333**
VALVE FLAPPER – **C3421**
VALVE STRAP – **C343N**
O-RING – **C344**
BASE RING – **C345GY**

OARS & OARLOCK PARTS
OARS – **DC632**
OARLOCK – **DC4126GY**
SCREW CAPS – **DC393**
PIN & RIVET SET – **COM165**
OAR HOLDER – **DC4123GY**

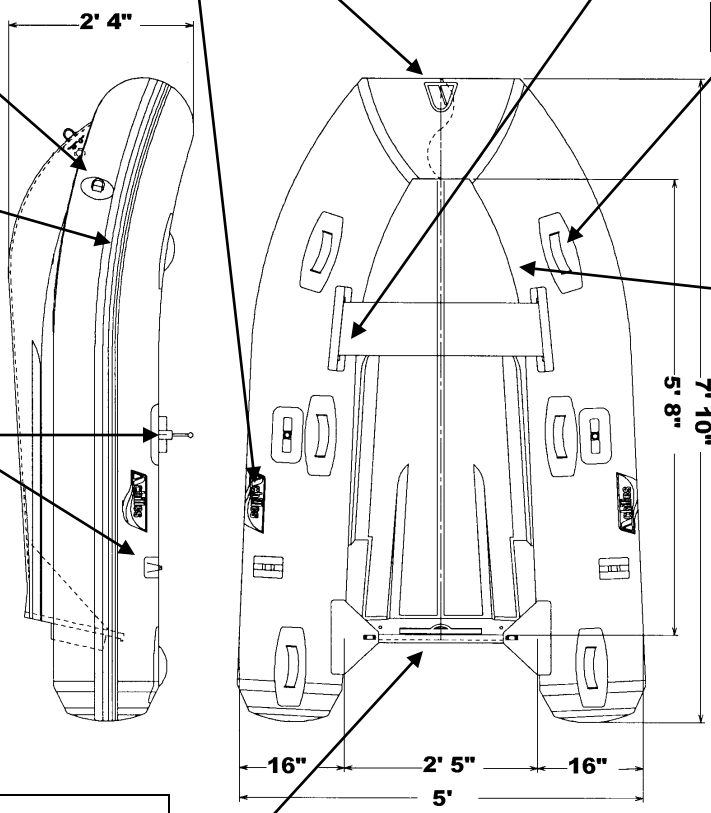

TRANSOM PARTS
EYE BOLT FOR HB'S – **ACH10**
INSIDE TRANSOM PLATE **– SC620**
OUTSIDE TRANSOM PLATE – **SC3104**
HB SPLASH GUARD BRACKETS **- WH001**
HB SPLASH GUARD **- TR001**

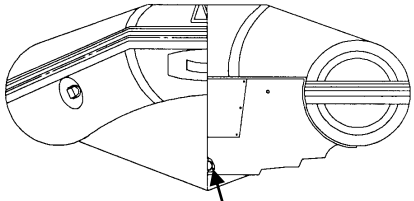

OTHER PARTS
REPAIR KIT – **C210PG**
FOOT PUMP BRAVO 8 – **BR8**
(**OPTIONAL**)
UNDER SEAT STOWAGE BAG W/POCKETS **- USSTBAG**
PRESSURE GUAGE – **E132**

SELF-BAILER PARTS
CEREDI DRAIN VALVE (INCLUDES PLUG) – **C447**
CEREDI PLUG ONLY – **CEREDI**

HB-240LX

2023

LINE DRAWING & PARTS LIST